5741341COM - Coffee Table

Finish: Magnolia Oak

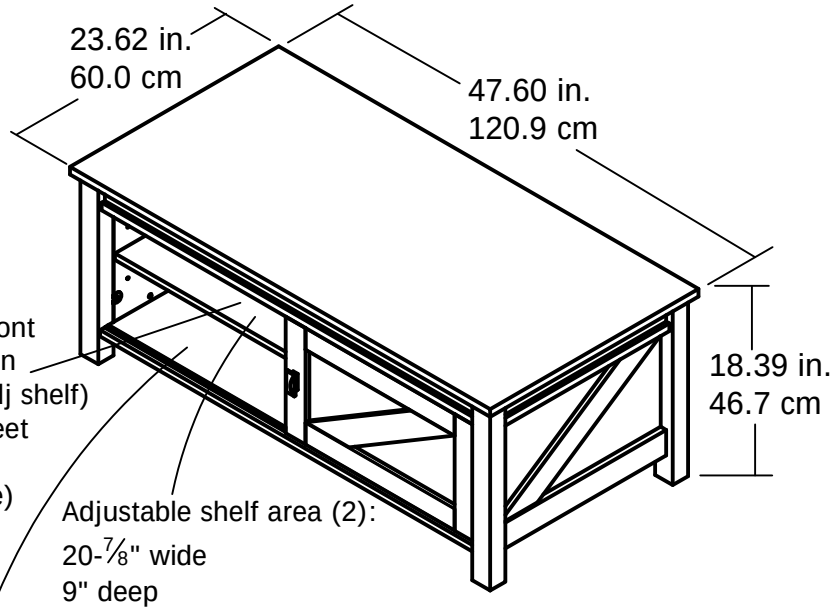

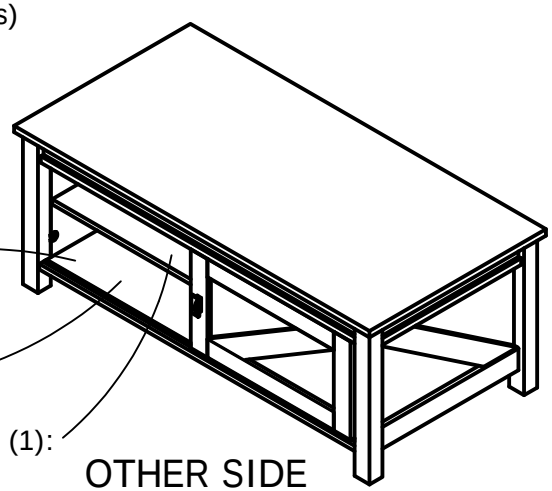

Wood Breakdown: 90%

Total storage: 6.35 cubic feet

Overall Product Size:

47.60"W x 23.62"D x 18.39"H

120.9cm W x 60.0cm D x 46.7cm H

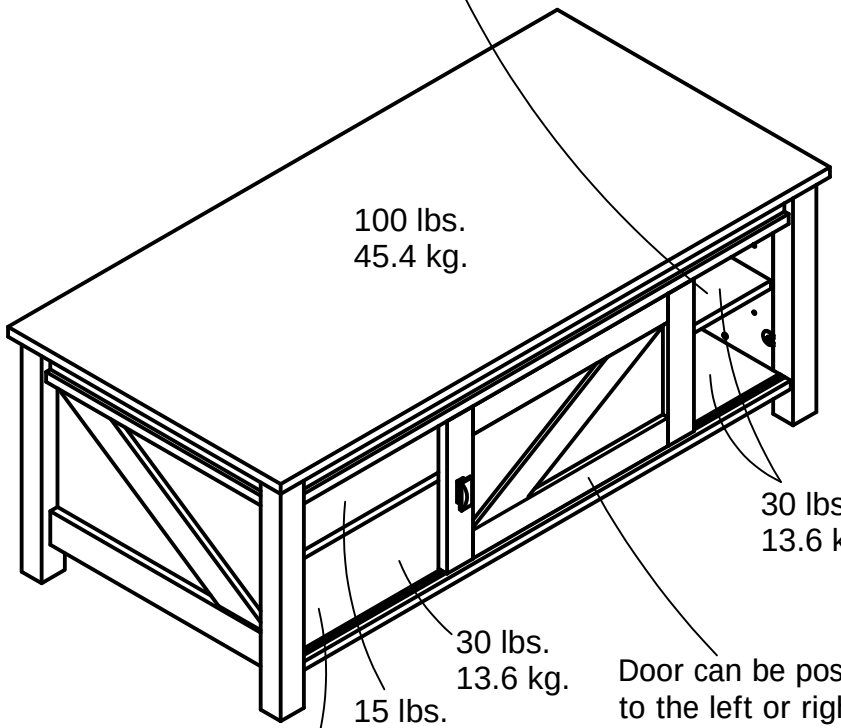

Maximum Weight Capacities

Unit Weight: 91 lbs. (41.3 kg)